Liquid Level Sensor Model BI-2000 Series

Features

The Bintech 2000 series level sensor with a programmable head mounted transmitter unit provides a linearised 4 to 20 mA output of tank volume. The sensor mounting enables direct replacement of mechanical style indicators and is ideally suited for use with the BI-1030 Remote Display Unit for the monitoring of underground and above ground tank contents. The Bintech 2000 sensor is designed and manufactured in Australia.

The Bintech 2000 series level sensor features:

- Stainless Steel IP67 head
- Approved LPG flange
- High buoyancy durable Buna float
- Available remote indication for field and safe area installation
- Wide range of operating temperature and pressure

Specifications

Characteristic	Detail
Electrical Enclosure:	Stainless steel IP66 rated Ex d
Mounting:	Flange with 8 x 14 mm holes on 89 mm (3.5 inch) pitch circle
Gasket:	Spiral stainless steel and polymer
Cable access:	M20 x 1.5 mm opening
Access:	Screw cap with hex lock screw
Electrical connection:	2 wire connection to the transmitter 2 wire potentiometer connection direct to the sensor
Electrical output signal:	4 to 20 mA from the transmitter (loop powered)
Guide Tube:	13 mm diameter x 1.2 mm wall
Float:	Cylindtical Nitrile float (Other float options available)
Sensor Length:	500 to 3000 mm
Contact Separation:	18 mm (10 mm option for shorter sensors)
Resolution:	Typically better than ±□9 mm (depends on the contact separation)
Max. Operating Pressure:	6000 kPa (depends upon flange and float type)
Operating Temp range	-20 to +60ºC (depends upon electrical enclosure and float type)
Certification:	Ex s d IIB T6 IP66 Zone 1 Head, Zone 0 Probe ANZ Ex 09.4087X

Theory and operation of sensor

Resistor - Reed Switch Chain

The sensor operates using the float principle with transmission in a 2- or 3-wire circuit. A series of reed switches and resistors built into the sensor are operated by a permanent magnet enclosed in the float. Changes in level are translated into a linear change in resistance. The switches are spaced 10 or 18mm apart. In operation, the magnet fitted in the float rises with the liquid and operates the reed switches sequentially increasing the resistance. The three wires may be connected as a simple resistive or a potentiometer circuit. The changes in resistance are detected in the transmitter and are converted to a 4 to 20 mA current.

With the tank empty the resistance is factory set, giving a 4 mA current. The resistance at maximum level is dependent on the length of the sensor and is calibrated to provide 20 mA. The sensor is mounted on the turret of the tank.

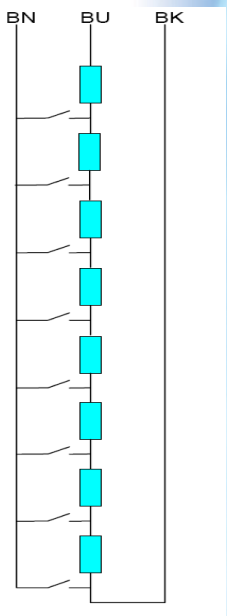

Sensor sealing

The resistor reed switch chain is sealed within the sensor tube with a potting compound in the upper gland. This ensures electrical and mechanical isolation. The resistor chain may be removed from the sensor for service if necessary without needing to drain the tank to remove the sensor.

The transmitter and electrical connections to the loop circuit are contained in an Ex d rated enclosure. The transmitter is electrically programmed in the factory according to the dimensions and shape of the tank to achieve the required linearity e.g. with an S curve for a horizontal bullet tank.
The transmitter is loop powered and operates from 12 to 24 VDC and can drive any standard 4 to 20 mA circuit.

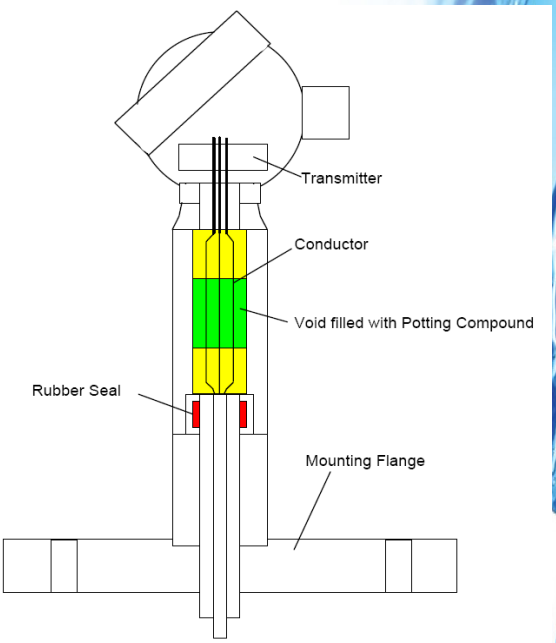

Configuration

The movement of the float along the sensor shaft produces a linear change in resistance. Using the head mounted transmitter unit this change in resistance can be programmed to produce a current that is linear with change in volume. A 4 to 20 mA display will therefore directly indicate the contents of the tank. Bintech will program the transmitter using the key dimensions of the tank. Both vertical and horizontal bullet tanks may be programmed as required. When ordering the 2000 series sensors with a transmitter, the tank dimensions as shown below, need to be provided.

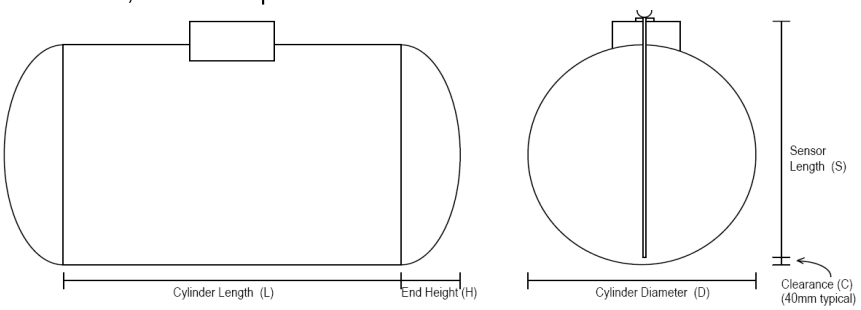

L = mm	H = mm	C = mm
D = mm	S = mm	Volume = kl

Ordering Information

A - Mounting	*B* - Housing	*C* - Float	*D* - Contact Separation	*E* - Transmitter	*F* - Sensor Length
20 8 Hole *	**10** Stainless Steel Ex d	**SB40/14/R**	**K10** 10mm reed chain	**TA** PR5343B	**L** xxxx mm
30 4 Hole **	**20** Aluminium Ex d with LCD	**SVK44/15/R**	**K18** 18mm reed chain	**TD** PR5335D (HART)	
40 ANSI Range***	**30** Aluminium IP65	**Other** Specify			
50 NPT Screwed ****	**40** Other—Specify	**N** None			
60 BSP Screwed ****	**50** None—flying lead				
70 Other—specify					
80 Bypass gauge (side mounting)					

Model Code: BI-2000-*A-B-C-D-E-F*

* Fits Magnatel 8 hole flange

** Fits Rochester Senior Gauge 4 hole 2.5 inch pcd

*** Specify size & rating, e.g. 3" ANSI 300lb

**** Specify thread size (BSP or NPT)

Example:

A 2450mm LPG sensor with an 8 hole flange, stainless steel Ex d housing, nitrile float with 18mm reed chain and PR5343B transmitter:

BI-2000-20-10-SB40/14/R-K18-TA-L2450

Bintech Systems Pty Ltd
ABN 74 123 478 431

5 / 58 Mahoney Road
Thomastown VIC 3074
Australia

T: +613 9467 7300
T: 1300 363 163
sales@bintech.com.au
www.bintech.com.au

Version 3_ June 2019

CERTIFIED ISO 9001 JAS-ANZ